# ELECTRIC FLEXIBLE BATCH BROILER

## UNDER DEVELOPMENT

### BETTER PERFORMANCE

- Broils a batch of product directly from the frozen state. No need to thaw.
- Delivers quick response to spikes in product demand; a single cook delivers 8 Whoppers or 12 burgers in 2 minutes.

### BETTER DESIGN

- Advanced batch broil design cooks product in a group for more consistent quality
- Provides quicker, easier maintenance with fewer parts that require daily cleaning
- Reduced heat environment improves worker productivity
- Less heat in the restaurant also reduces air conditioning costs
- More compact size means a smaller footprint; it's also easier to install

### BETTER FOOD PRODUCT FLEXIBILITY

- Offers a separate, unique cooking profile for every batch load; switch from Whoppers to Angus or Chicken with the push of a button
- Allows more menu variety and expansion with unlimited new products and LTOs

### BETTER COOKED PRODUCT

- Integration with PHU; full batch of product drops directly into the PHU pan

### GLOBAL CAPABILITIES

- CE and international approvals for world wide shipment

*Your Solutions Partner*

Duke®

# ELECTRIC FLEXIBLE BATCH BROILER

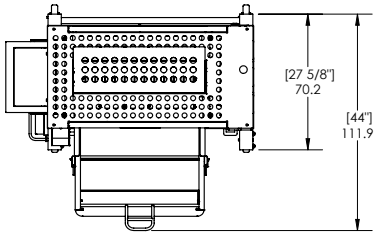


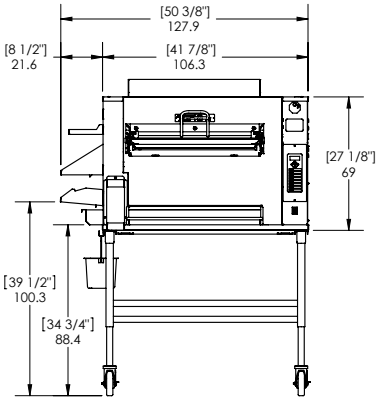


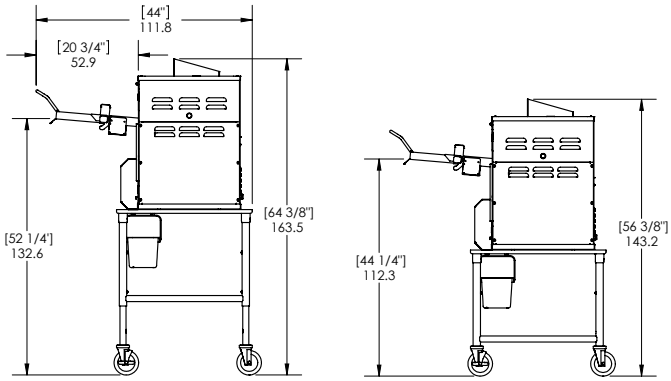


SHOWN ON ADJUSTABLE STAND

HIGH STAND POSITION

LOW STAND POSITION

FOR BURGER KING
*Exclusive*
**SERVICE ASSURANCE**
*Program*
FRANCHISEES

- Service network with emergency service goal of four hours or less
- Ongoing field training program
- Detailed troubleshooting documents for operators and service technicians
- Follow-up calls after installation or service
- Inventory monitoring program
- Parts discount on initial order
- Detailed service reports
- Monthly report cards for service companies

**U.S. Patent and Foreign Patents Pending**
All dimensions and specifications are subject to change without notice.


**Duke Manufacturing Co.**
2305 N. Broadway
St. Louis, MO 63102
Toll Free: 800-735-3853
Phone: 314-231-1130
www.dukemfg.com

For inquiry or order assistance contact:
Bob Booker
800-735-3853

Order online at
**www.TheBetterWayToBroil.com**
or call 800-735-3853, ext. 260
or fax 314-231-5074



© Duke Manufacturing Co. 2009

BKFBBESS09